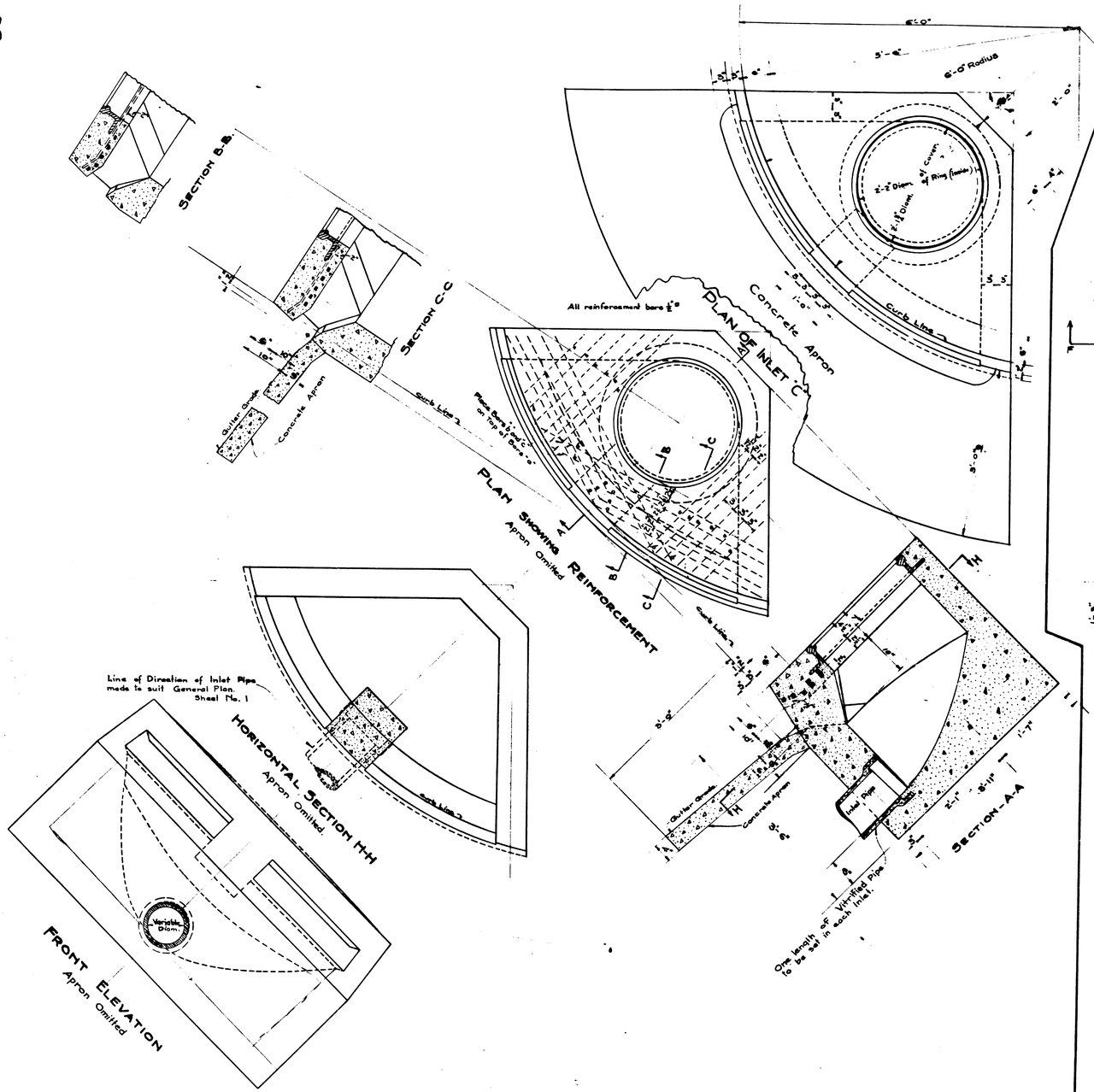

Details Type "C" Inlet
Scale 1" = 1'

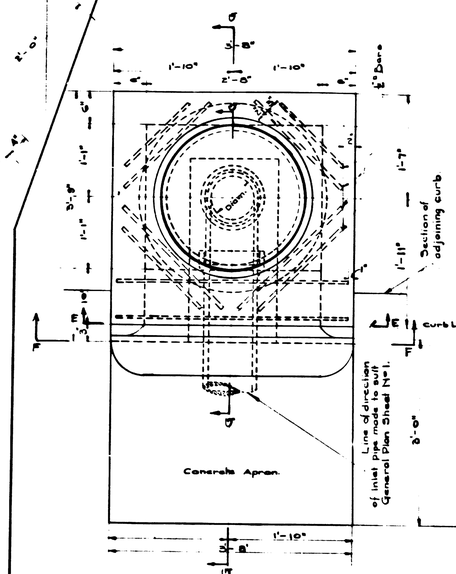

Plan of Inlet "A"

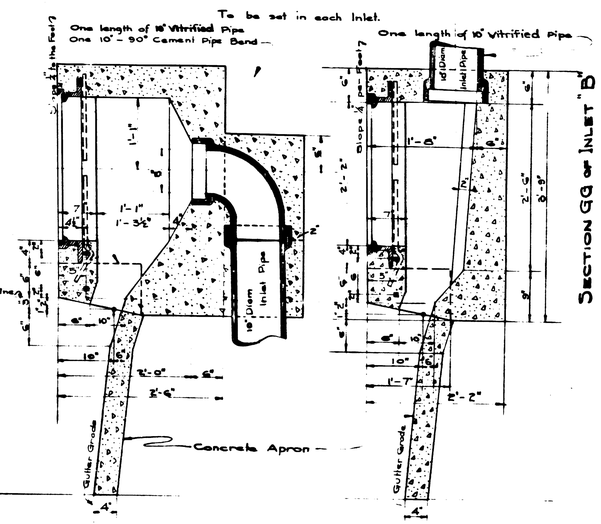

Section G G

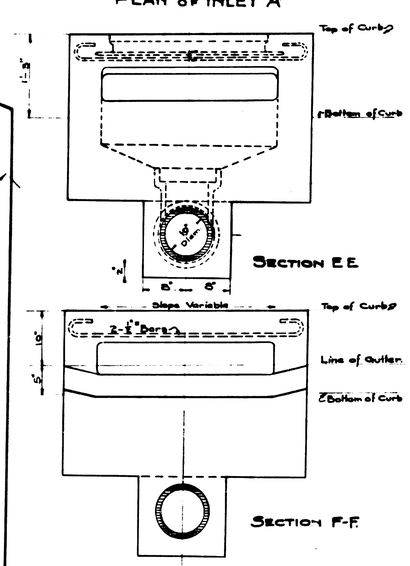

Details of Types "A" and "B" Inlets
Scale 1" = 1'

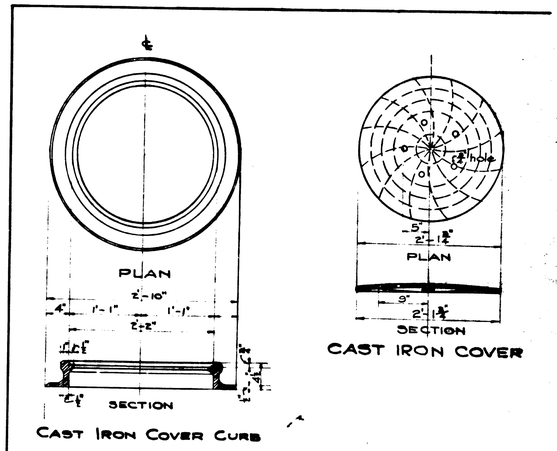

Details of Inlet Cover and Curb
Scale 1" = 1'

FILED
JULY 1, 1929
City Engineer

Sheet No. 2
Plan No. 1000-A

K-Street Storm Drain

Details of Inlet

City of San Bernardino,
California.

June 1929.

A. H. Lowe.
City Engineer.

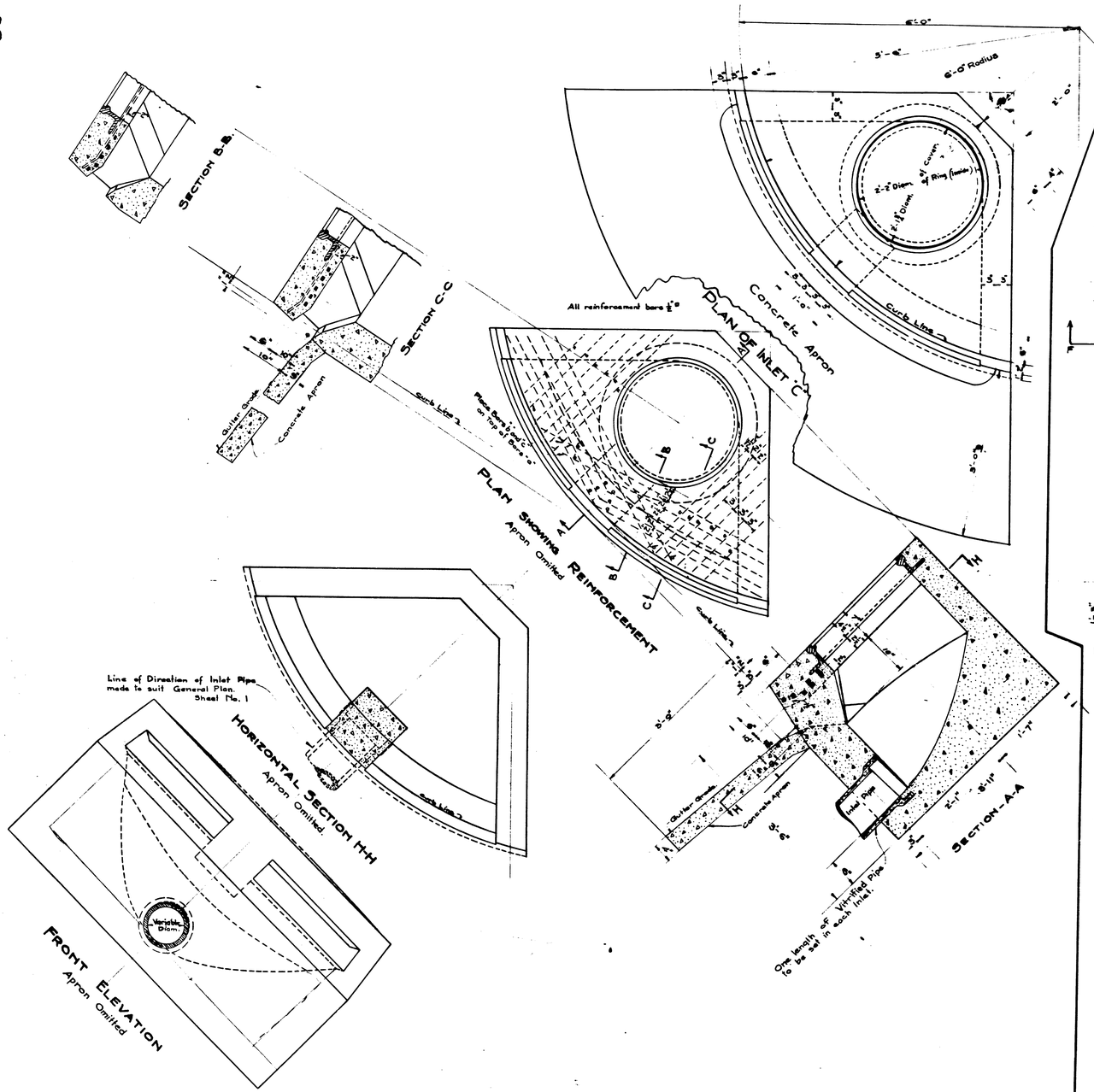

Details Type "C" Inlet
Scale 1" = 1'

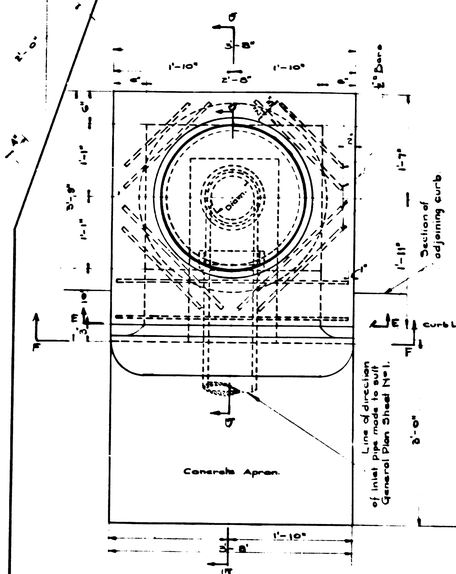

Plan of Inlet "A"

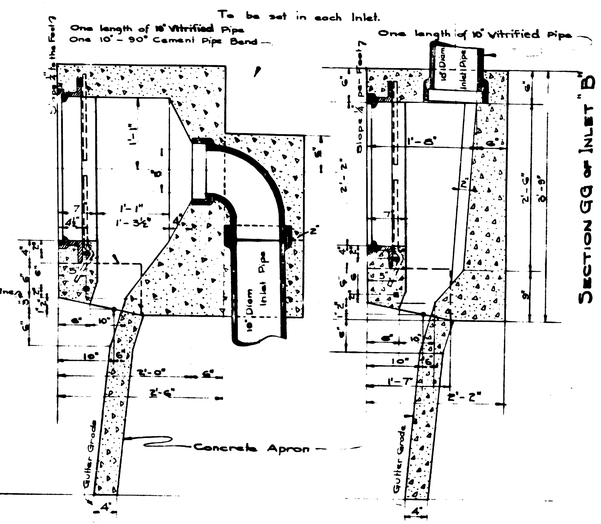

Section G G

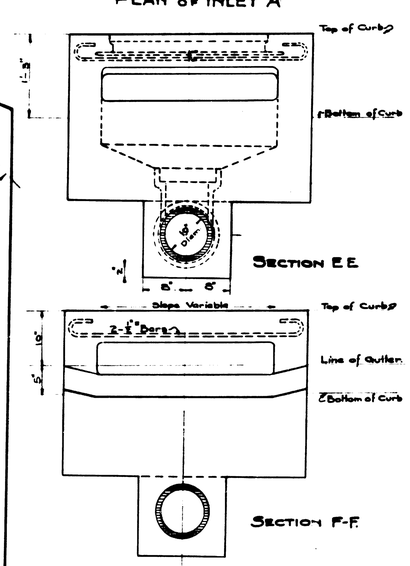

Details of Types "A" and "B" Inlets
Scale 1" = 1'

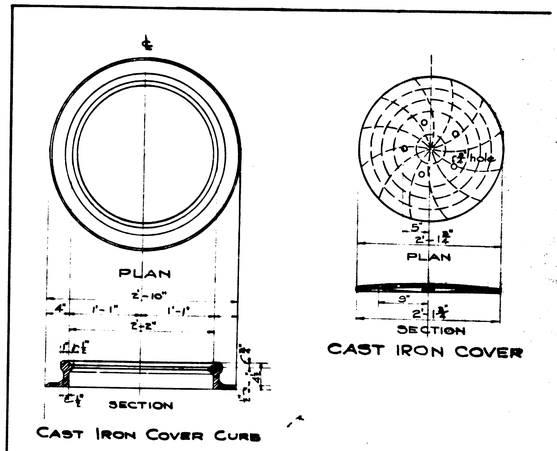

Details of Inlet Cover and Curb
Scale 1" = 1'

FILED
JULY 1, 1929
City Engineer

Sheet No. 2
Plan No. 1000-A

K-Street Storm Drain

Details of Inlet

City of San Bernardino,
California.

June 1929.

A. H. Lowe.
City Engineer.